MASHIKO 200 SQUARE 7649

SKU 1121032

astro

PRODUCT SPECIFICATION

GENERAL

FINISH:	Polished Chrome	GROSS WEIGHT:	3.75 (lbs)
MAIN MATERIAL:	Metal - Mild Steel	CLASS:	cETLus (Class I)
DIMENSIONS:	H:200mm W:200mm D: 79mm H:7.87" W:7.87" D: 3.11"	LISTING LOCATION:	Damp
		FITTING METHOD:	4" Octagon Box
INSTALLATION ORIENTATION:	Ceiling Mount	ADA COMPLIANT:	No
CUT OUT HOLE:	Not Applicable	IC RATING:	Not Applicable
RECESS DEPTH:	Not Applicable	VOLTAGE:	Mains 120 (V)
FIRE RATING:	Not Applicable		
CABLE LENGTH:	Not Applicable		

LAMP

LIGHT SOURCE:	E26/Medium	MACADAM ELLIPSE:	Not Applicable
MAXIMUM WATTAGE:	60W Max	UGR:	Not Applicable
MAXIMUM LAMP LENGTH:	130mm / 5.12"	BEAM ANGLE:	Not Applicable
LAMP INCLUDED?	No	TILT ADJUSTMENT ANGLE:	Not Applicable
DELIVERED LUMENS:	Lamp Dependent	ROTATION ADJUSTMENT ANGLE:	Not Applicable
COLOR TEMP:	Lamp Dependent	AVERAGE LIFESPAN:	Lamp Dependent
CRI:	Lamp Dependent	L70:	Not Applicable
R9:	Lamp Dependent		

ELECTRICAL

SWITCHED:	No	SUPPLY FREQUENCY:	Not Applicable
DIMMABLE:	Yes	DRIVER / BALLAST VOLTAGE:	Not Applicable
DIMMING METHOD:	Lamp Dependent	DRIVER AVERAGE LIFESPAN:	Not Applicable
DRIVER OUTPUT CURRENT:	Not Applicable	EFFICACY:	Lamp Dependent
DRIVER OUTPUT VOLTAGE:	Not Applicable	DRIVER / BALLAST INCLUDED?	Not Applicable

ADDITIONAL INFORMATION

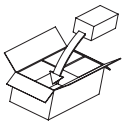

BOX QUANTITY X6
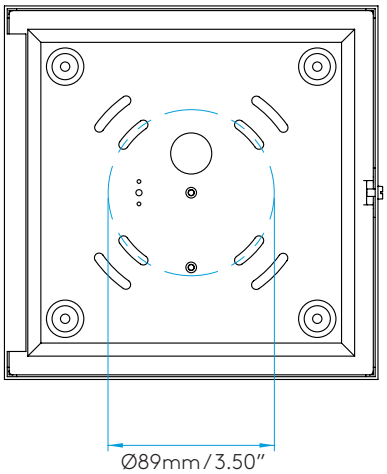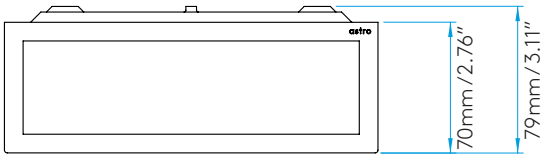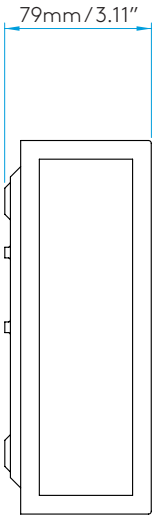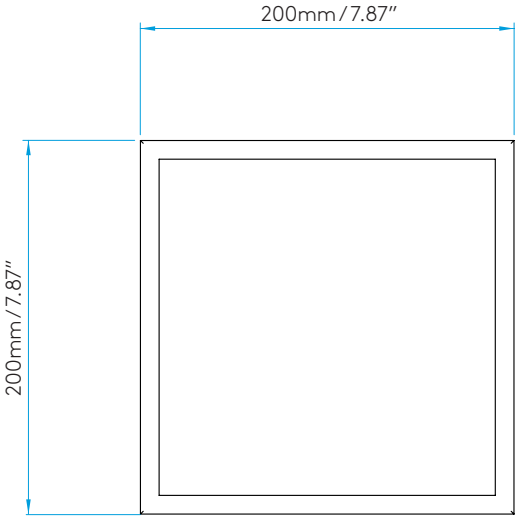
PRODUCT ELEVATIONS