VETRO ROUND 5667

SKU 1254001

astro

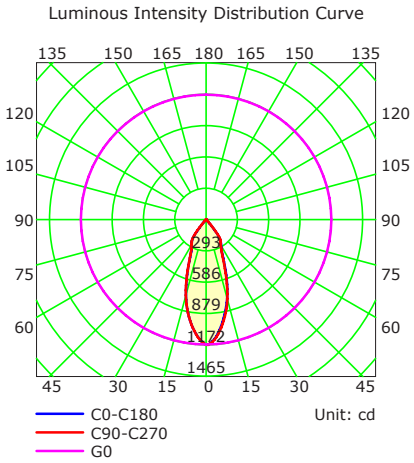

PRODUCT SPECIFICATION

GENERAL

FINISH:	White
MAIN MATERIAL:	Metal - Aluminium
DIMENSIONS:	Ø:85mm D: 75mm Ø:3.34" D: 2.95"
INSTALLATION ORIENTATION:	Ceiling Mount
CUT OUT HOLE:	70mm/2-3/4"
RECESS DEPTH:	150mm/5.9"
FIRE RATING:	Not Applicable
CABLE LENGTH:	Not Applicable

GROSS WEIGHT:	0.70 (lbs)
CLASS:	ETL (Class 2)
LISTING LOCATION:	Damp
FITTING METHOD:	Recessed in Drywall Ceiling
ADA COMPLIANT:	Yes
IC RATING:	Non IC Rated
VOLTAGE:	Constant Current 350 (mA)
PRODUCT F MARK:	Suitable for mounting on flammable materials

LAMP

LIGHT SOURCE:	COB LED
MAXIMUM WATTAGE:	1 x 10W
MAXIMUM LAMP LENGTH:	Not Applicable
LAMP INCLUDED?	Yes (Integral)
DELIVERED LUMENS:	614.3 (lm)
COLOR TEMP:	3000 (K)
CRI:	80
R9:	14

MACADAM ELIPSE:	3 - Step
UGR:	To Be Advised
BEAM ANGLE:	20.4 (Degrees)
TILT ADJUSTMENT ANGLE:	Not Applicable
ROTATION ADJUSTMENT ANGLE:	Not Applicable
AVERAGE LIFESPAN:	50,000 (Hrs)
L70:	To Be Advised

ELECTRICAL

SWITCHED:	No
DIMMABLE:	Yes
DIMMING METHOD:	Control Gear Dependant
DRIVER OUTPUT CURRENT:	Not Applicable
DRIVER OUTPUT VOLTAGE:	Not Applicable

SUPPLY FREQUENCY:	Not Applicable
DRIVER/BALLAST VOLTAGE:	Not Applicable
DRIVER AVERAGE LIFESPAN:	Not Applicable
EFFICACY:	49.74 (lm/w)
DRIVER INCLUDED?	No

ADDITIONAL INFORMATION

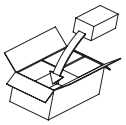

BOX QUANTITY X50

PRODUCT ELEVATIONS
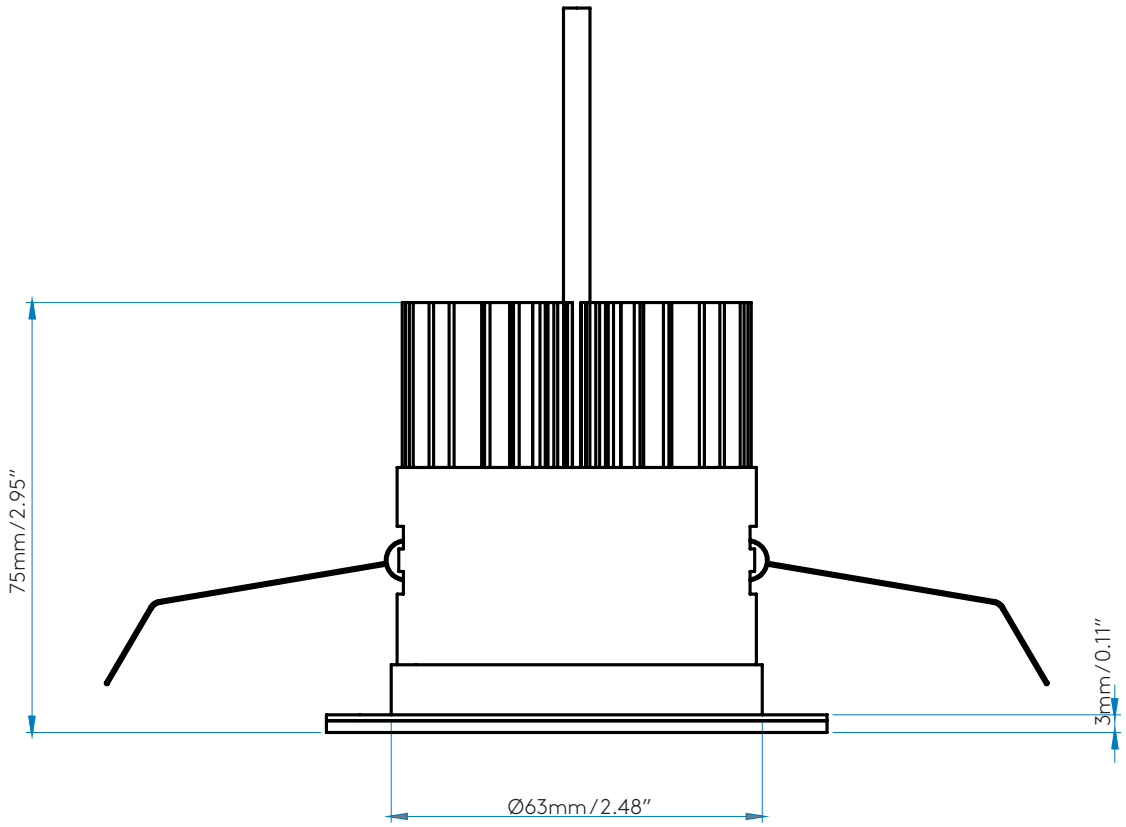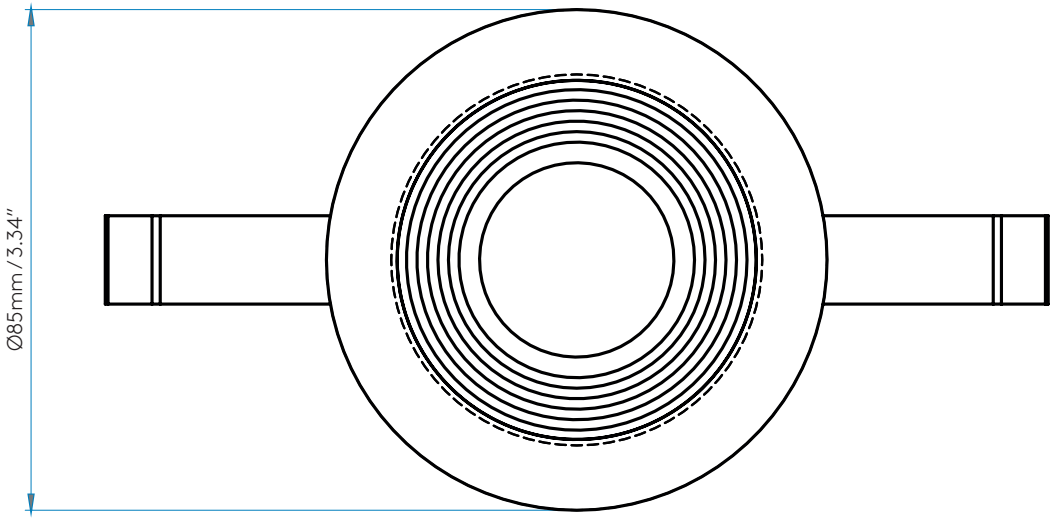
70mm / 2.75″